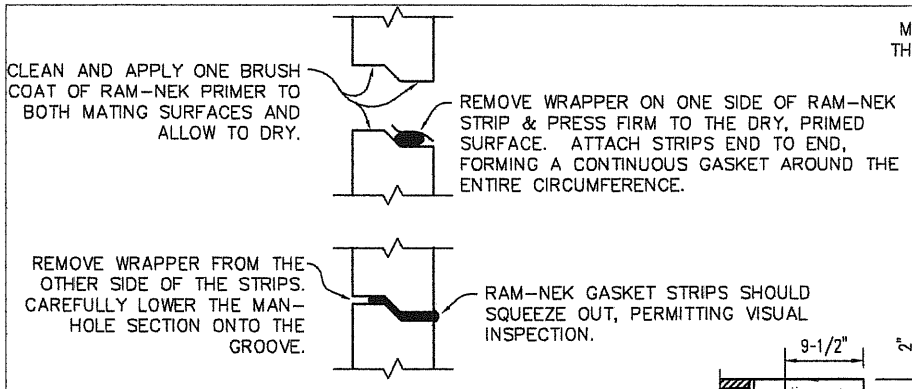

DETAIL A RAM-NEK® GASKETS
For ALL manhole joints

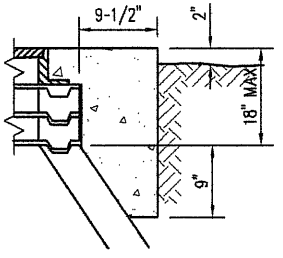

DETAIL B COLLARS IN UNPAVED AREAS

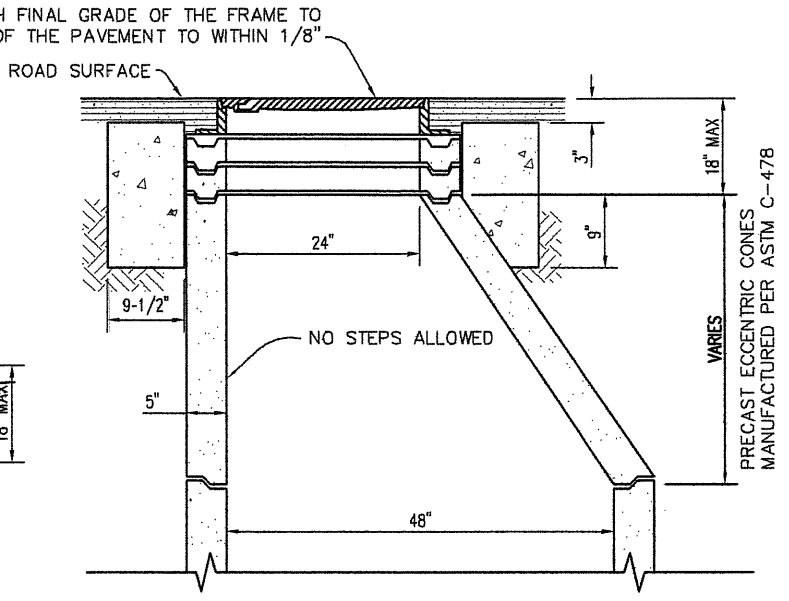

UPPER MANHOLE SECTION (ROTATED 45 DEGREES)

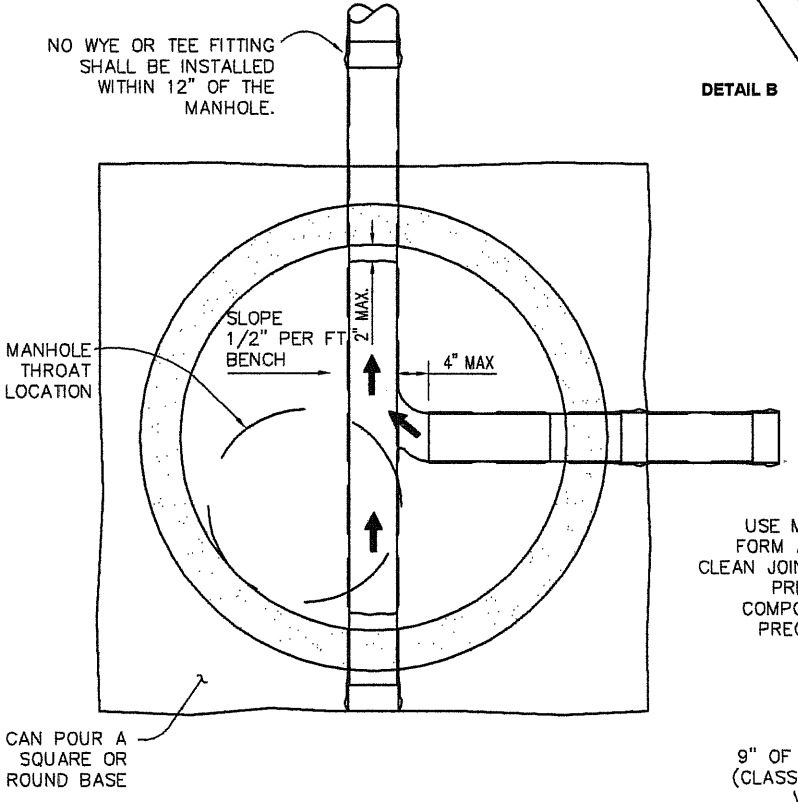

BASE SECTION A-A

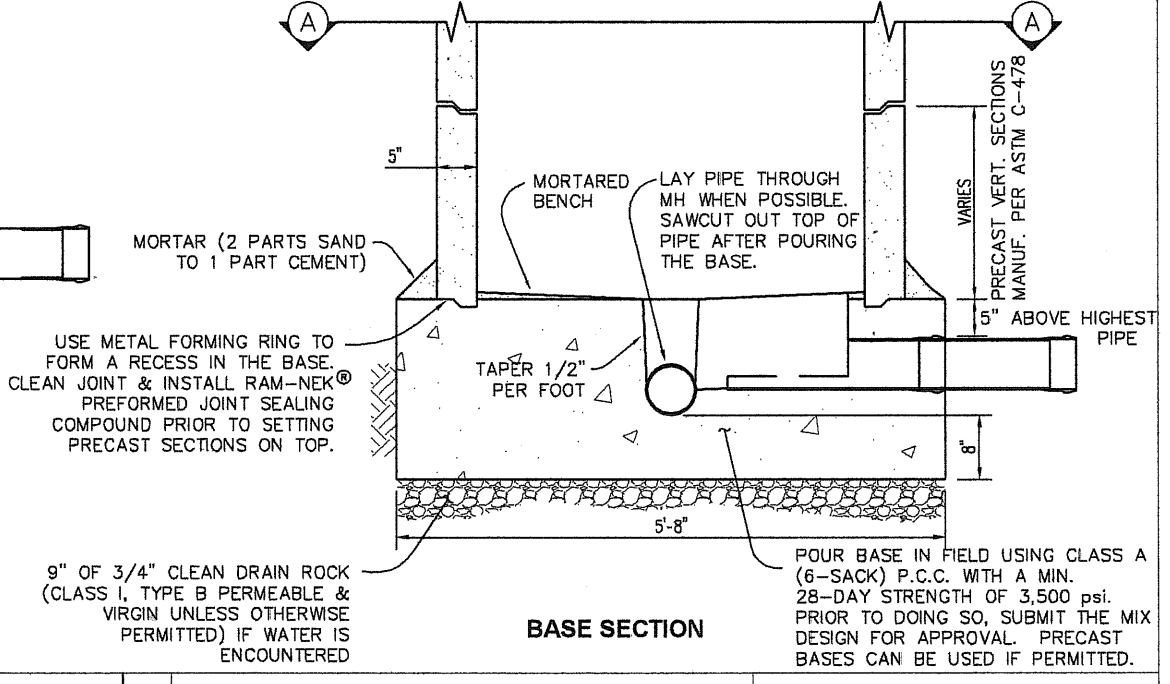

BASE SECTION

CITY OF PACIFICA
PUBLIC WORKS / ENGINEERING DIVISION

DESIGNED BY:
DRAWN BY: KTL 2-13-01
CHK'D BY:
APPROVED BY:

REV.	DATE	DESCRIPTION	BY

REVISIONS

STANDARD MANHOLE

FOR 17" OR SMALLER LINES

STANDARD SEWER DETAILS

SCALE: NONE

PLAN NO.