IV. ENVIRONMENTAL IMPACT ANALYSIS
F. TRANSPORTATION/TRAFFIC

INTRODUCTION

The information in this section is based primarily on the following documents (included in Appendix F): *Fassler Avenue Residential Project Traffic Impact Study,* Dowling Associates, Inc., July 28, 2006, revised October 20, 2006; and *Peer Review of the Revised Fassler Avenue Residential Project Traffic Impact Study,* Hexagon Transportation Consultants, Inc., August 22, 2006, revised December 12, 2006.

STUDY INTERSECTIONS AND FORECAST SCENARIOS

The following three intersections were analyzed for the weekday AM peak hour (7:00 AM to 9:00 AM) and PM peak hour (4:00 PM to 6:00 PM):

1. State Route (SR1)/Fassler Avenue (signalized)
2. SR1/Reina del Mar Avenue (signalized)
3. Fassler Avenue/Proposed Project Access (unsignalized)

For this study, the following scenarios were evaluated:

- Existing Condition (existing traffic)
- Project Condition (existing plus proposed traffic)
- Cumulative-Without-Project Condition (existing traffic conditions plus traffic associated with a one percent growth factor)
- Cumulative-With-Project Condition (existing traffic conditions plus traffic associated with a one percent growth factor plus traffic from the proposed project)

ANALYSIS METHODOLOGY

Level of service (LOS) analysis for the signalized intersections was conducted using the Highway Capacity Manual (HCM) methodology in Synchro software. TRAFFIX software was used to calculate the HCM-based LOS for the proposed unsignalized intersection that would serve the project. LOS is a grading system used to describe overall traffic operations at intersections, with LOS A being the best results and LOS F being the worst. LOS D is usually considered to be the worst acceptable result for

signalized intersections. The LOS is calculated by entering several inputs, such as traffic volumes and intersection lane geometry, into formulas that yield an average delay for vehicles at the intersection. For unsignalized intersections, such as what is anticipated at the access intersection for the proposed project, similar calculations are performed, but the reported result is the worst operating approach. For unsignalized intersections, LOS E is usually considered the worst acceptable result.

ENVIRONMENTAL SETTING

Roadways

Fassler Avenue serves as a collector street for several residential developments east of SR1. In the vicinity of the project site, approximately 0.6 miles from SR1, Fassler Avenue transitions from four lanes to two lanes. The speed limit on Fassler Avenue is 35 miles per hour (mph). There is a relatively steep grade of about nine percent on Fassler Avenue in the vicinity of the project site – it drops approximately 300 feet from Driftwood Circle to Roberts Road, a distance of 0.6 mile. On the west side of SR1, Fassler Avenue serves a commercial area that borders the Pacific Ocean.

SR1 is an arterial roadway in the project vicinity that serves the communities along the Pacific Ocean south of San Francisco. In the project vicinity, it consists of four lanes, and has a speed limit of 45 mph. There are two signalized intersections in the project vicinity, both of which were studied in the traffic analysis for the proposed project.

- *SR1/Reina del Mar Avenue* is a four-legged intersection with protected left-turn phasing (left-turning traffic is served by separate, protected phases) for the north-south directions and split phasing (left, through, and right movements all proceed together, separate from the opposite direction) for the east-west directions. This intersection has single left-tern lanes for the northbound and southbound SR1 approaches. On the westbound approach, there are two lanes, a right-turn lane and a shared left-through-right lane. Pedestrians are prohibited from crossing the north leg of the intersection.

- *SR1/Fassler Avenue* is a four-legged intersection with the same basic signal configuration as SR1/Reina del Mar Avenue. There are two left-turn lanes for the southbound SR1 approach, and two right-turn lanes for the westbound Fassler Avenue approach. These two right-turn lanes are served by an "overlap" phase in which they receive a green right arrow during the time when the southbound approach left-turns have a green light. Eastbound approach right-turn traffic (heading toward southbound SR1) is not technically controlled by the traffic signal – this movement is subject to a yield sign near the intersection. Pedestrians are prohibited from crossing the north and west legs of the intersection. There is an unsignalized intersection (serving Harvey Way) very close to this intersection, just to the east, there is "KEEP CLEAR" text on the pavement to keep the access to Harvey Way from being blocked by queues.

Reina del Mar Avenue is a collector street that serves a smaller area than Fassler Avenue, and one which includes some commercial uses and Vallemar School, in addition to residential areas. It consists of two lanes and has a speed limit of 25 mph. On the west side of SR1, the avenue ends a short distance from SR1 at a parking lot that serves as a staging area for a recreational path. There is also a driveway that leads to a solid waste handling facility.

Transit

Several SamTrans bus routes serve the area. Routes CX, DX, 16, 110, 112, and 140 all travel along SR1. Routes 16 and 140 also travel along Fassler Avenue. There are bus stops near both the SR1/Fassler Avenue and SR1/Reina del Mar Avenue intersections, including a shelter for northbound travel just north of Reina del Mar Avenue. Routes CX, DX, and 16 operate only during weekday commute periods with headways approximately 20 to 30 minutes apart. Routes 110 and 112 generally operate on 60-minute headways during the week, while Route 140 operates on 20 to 30 minute headways.

Vehicular Traffic

Peak period vehicular traffic in the area tends to be very directional, since much of the area in the project vicinity is residential: people generally drive to their jobs in the morning and return to their homes in the evening. Most of the jobs in the region that people might travel to are located to the north of the study area, toward San Francisco.

Peak period traffic counts were conducted at the two existing study intersections on a weekday during a week without a major holiday in 2005 for the original version of the traffic analysis. A mechanical count was also conducted near the location of the proposed project in 2005. Additionally, new counts were conducted at the two signalized intersections in October, 2006 on a similar day as for the 2005 counts.

Field observations were conducted during peak periods on a non-holiday weekday in October, primarily to determine if there was unserved existing demand that would indicate a worse LOS than reflected in the calculations using the 2005 counts. During the AM peak period, nearly every vehicle arriving during the peak hour made it through the intersection. There were some vehicles that did not make it through the intersections during the peak hour, but only about 10 to 20 at each intersection. However, there were several individual cycles within the peak hour in which many more vehicles were not served by the traffic signals – this condition did cause relatively long queues and delays. As noted above, these long queues did not last for more than a few minutes beyond the peak hour – i.e., they completely cleared the intersections only a few minutes beyond the end of the peak hour after they began to build (i.e., at that point in time, vehicles arriving at the intersection were able to proceed through the intersection on the next available green indication). These conditions indicate that, while virtually all of the vehicles desiring to proceed through the intersections during the peak hour were able to do so, there is a peak period of less than an hour within the peak hour during which demand exceeds capacity and excess vehicles store in queues. This relatively brief peak period is then followed by a period of time in which the demand is less

than the service rate, which allows the queue to eventually shrink back to nothing at about the end of the hour.

The HCM LOS methodology attempts to capture this kind of condition by the use of a Peak Hour Factor (PHF). The PHF is calculated by taking the highest 15-minute volume, multiplying that volume by four, then dividing that result into the peak 60-minute volume. A typical PHF in an urban area is between 0.90 and 0.95. Although this is the standard methodology to calculate the peak "hour" LOS, it is somewhat misnamed, as it is actually calculating delay during the peak 15-minute period.

In order to develop volumes that reflect the existing traffic demand, the sum of the volumes from the beginning of the count period to the end of each 15-minute counting period was examined, along with the 15-minute counts. The 15-minute counts during the peak hour were modified such that the summed adjusted volumes at the time the queues completely cleared from the intersection were the same as those that were counted. For example, at the intersection of SR1/Fassler Avenue, the total volume of northbound through traffic from 6:30 AM through 9:00 AM was 4,208 vehicles, so the goal was to identify 15-minute volumes that added to that total. The unserved volume was also checked to determine if it was consistent with the queues appearing during that time.

For each intersection, the adjustments described above meant that there would be a different demand profile arriving downstream of the bottleneck intersection. Adjustments were made to account for this, and they are included in the existing volumes.

The result of these adjustments was that the resulting volumes used in the LOS calculations were not notably different from the previous analysis volumes or even the recent raw counts, but the PHF was considerably different. The lower PHF results in delay and LOS results that reflect worse operating conditions that were reported in the original report for this study.

Table IV.F-1 shows the counted and adjusted volumes for the two movements and one approach that required adjustment: the northbound through and westbound right movements at SR1/Fassler Avenue during the AM peak period and the southbound approach at SR1/Reina del Mar Avenue during the PM peak period. Figure IV.F-1 shows the resulting existing counts/volumes for the study intersections.

Both of the signalized study intersections were found to operate at LOS F during the AM peak hour. For the PM peak hour, the SR1/Reina del Mar Avenue intersection was found to operate at LOS F, and the SR1/Fassler Avenue intersection was found to operate at LOS D, (refer to Table IV.F-2). The calculated average delay for vehicles at the SR1/Reina del Mar Avenue intersection is 124.6 seconds per vehicle during the AM peak hour and 81.7 seconds per vehicle during the PM peak hour. For the SR1/Fassler Avenue intersection, the calculated delays are 96.0 seconds for AM and 37.3 seconds for PM conditions.

SR1/Reina del Mar Avenue

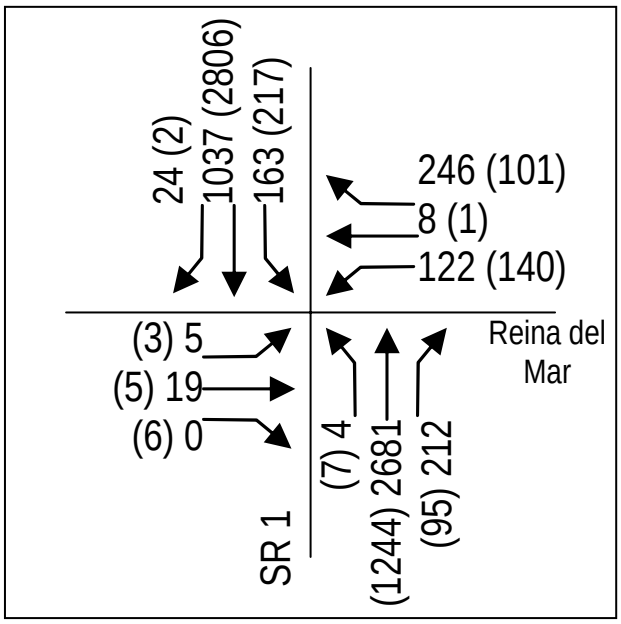

Legend

xxx = AM Peak Hour
(xxx) = PM Peak Hour

Volumes reported in vehicles per hour

SR1/Fassler Avenue

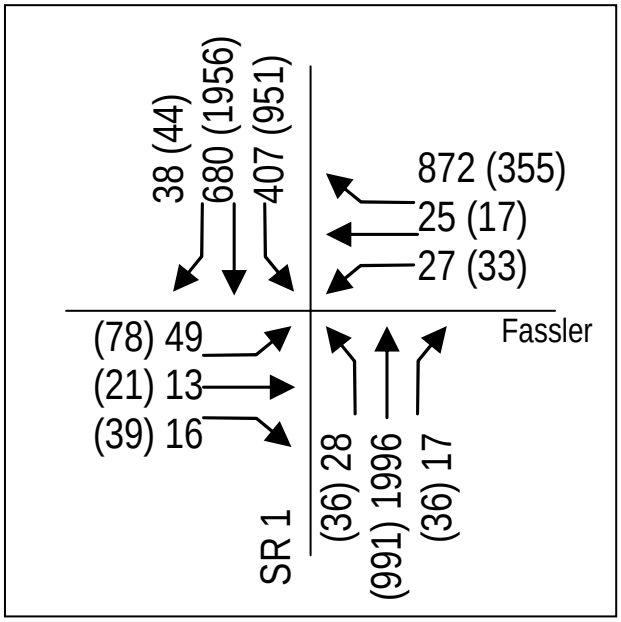

Fassler Avenue/Project Access

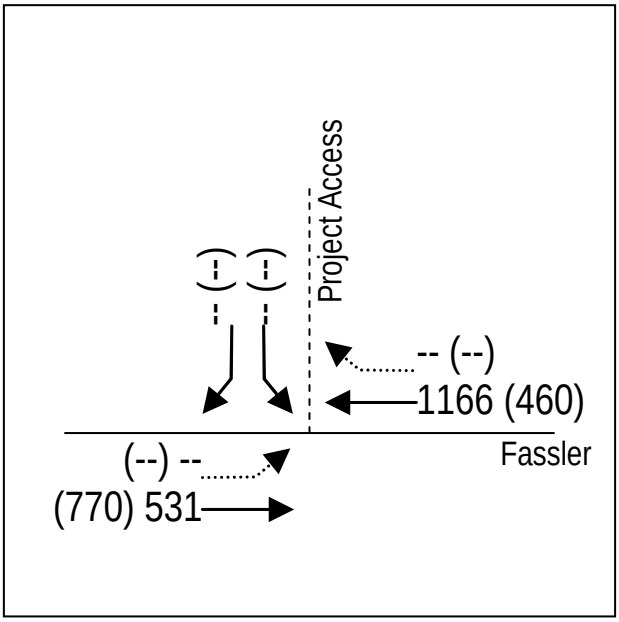

Source: Dowling Associates, Inc., October 2006.

CHRISTOPHER A. JOSEPH & ASSOCIATES
Environmental Planning and Research

NORTH

Figure IV.F-1
Existing Traffic Volumes

This page left blank intentionally.

Table IV.F-1
Existing Traffic Volumes in the Project Area With Volume Adjustments

SR1/Fassler– AM Peak Period					SR1/Reina del Mar – PM Peak Period		
	Northbound Thrus		Westbound Rights			Southbound Approach	
Time Ending	**Counted**	**Adjusted**	**Counted**	**Adjusted**	**Time Ending**	**Counted**	**Adjusted**
6:45	312	312	156	156	3:15	523	523
7:00	357	357	170	170	3:30	526	526
7:15	426	426	224	224	3:45	493	493
7:30	444	444	213	**240**	4:00	609	609
7:45	519	**530**	205	**220**	4:15	523	523
8:00	452	**596**	232	**215**	4:30	588	588
8:15	510	**460**	210	**210**	4:45	674	674
8:30	435	**450**	235	**205**	5:00	700	700
8:45	400	**353**	152	**147**	5:15	679	**850**
9:00	353	**320**	142	142	5:30	742	**750**
9:15	285	285	117	117	5:45	790	**725**
9:30	310	310	93	93	6:00	726	**700**
9:45	270	270	75	75	6:15	654	**650**
10:00	298	298	88	88	6:30	587	**503**
					6:45	480	480
Totals thru 9:00	**4,208**	**4,208**	**1,929**	**1,929**	7:00	425	425
Totals	**5,371**	**5,371**	**2,302**	**2,302**			
					Totals thru 6:30	**8,814**	**8,814**
					Totals	**9,719**	**9,719**

Source: Dowling Associates, Inc., 2006.

At both signalized intersections, the pedestrian crossings are set to coincide with the same signal phase as for the lowest vehicular volume approach. While this configuration is the safest for pedestrians, it is also usually the least efficient for vehicles. During the AM peak hour, there were no pedestrians crossing SR1 at Fassler Avenue on the day of the field observations, but there were pedestrians crossing on almost every cycle at Reina del Mar Avenue. These pedestrians appeared to be high school students crossing to reach the southbound bus stop. During the PM peak hour, there were a few pedestrians crossing at both intersections. Additionally, the SR1/Fassler Avenue signal appeared to be malfunctioning at times, giving a green indication to the eastbound approach when there were neither vehicles nor pedestrians present to have activated the signal. This did not occur on every cycle, but did waste some of the available green time by allocating it to a completely unused approach.

Based on field observations, the delays that result from the LOS calculations appear to be consistent with actual operating conditions.

Table IV.F-2
Existing Condition – LOS Results

Intersection	Peak Hour	Average Delay	LOS	HCM Crit. V/C[1]
SR1/Reina del Mar Avenue	AM	124.6	F	1.204
	PM	81.7	F	1.291
SR1/Fassler Avenue	AM	96.0	F	1.140
	PM	37.3	D	0.846

1 HCM critical V/C is calculated using Synchro output values and Equations 16-7 and 16-8 of the signalized intersection LOS methodology contained in the 2000 HCM. This approach to calculating inter section critical V/C in some cases may not match the V/C results obtained with the Synchro software but provides a close approximation. This is so because the Synchro software calculates adjusted total lost times and critical volumes at the intersection when some intersection movements overlap each other and run concurrently, whereas he HCM method uses a more simplified approach, which does not necessarily account for overlapping critical movements.

V/C = volume to capacity ratio

Source: Dowling Associates, Inc. and Hexagon Transportation Consultants, Inc., 2006.

ENVIRONMENTAL IMPACTS

Thresholds of Significance

In accordance with Appendix G to the *CEQA Guidelines*, a project would have a significant transportation/traffic impact if it would:

- Cause an increase in traffic which is substantial in relation to the existing traffic load and capacity of the street system (i.e., result in a substantial increase in either the number of vehicle trips, the V/C ratio on roads, or congestion at intersections);
- Exceed, either individually or cumulatively, a LOS standard established by the county congestion management agency for designated roads or highways;
- Result in a change in air traffic patterns, including either an increase in traffic levels or a change in location that results in substantial safety risks;
- Substantially increase hazards due to a design feature (e.g., sharp curves or dangerous intersections) or incompatible uses (e.g., farm equipment);
- Result in inadequate emergency access;
- Result in inadequate parking capacity; or

- Conflict with adopted policies, plans, or programs supporting alternative transportation (e.g., bus turnouts, bicycle racks).

The City currently considers LOS standards of A, B, C and D acceptable for all intersections in the City. The City does not have formally adopted thresholds of significance for determining intersection impacts and is currently in the process of studying and developing a formal set of thresholds. Until formal thresholds are adopted, the City has identified the interim thresholds listed below.

Signalized Intersections

For signalized intersections in the City of Pacifica, a project is said to create a significant impact on intersection LOS if for any peak hour the following would occur:

1. The LOS at the intersection degrades from an acceptable LOS D or better under background conditions to an unacceptable LOS E or worse under the project condition; or

2. The intersection is already operating at an unacceptable LOS E, and the addition of project traffic causes both the critical-movement delay at the intersection to increase by two or more seconds, and the V/C to increase by more than 0.010; or

3. The intersection is already operating at an unacceptable LOS F, and the addition of project traffic causes both the critical-movement delay at the intersection to increase by one or more seconds, and the V/C to increase by more than 0.010.

An exception to these thresholds applies when the addition of project traffic reduces the amount of average delay for critical movements (i.e., the change in average delay for critical movements is negative). In this case, the threshold of significance is an increase in the critical V/C value of more than 0.010.

V/C is a measure of traffic demand on a facility (expressed as volume) compared to its traffic-carrying capacity. A V/C ratio of 0.7, for example, indicates that a traffic facility is operating at 70 percent of its capacity.

Unsignalized Intersections

A significant impact would occur at an unsignalized intersection if the worst stop-controlled approach at an intersection is projected to operate at an unacceptable LOS E or F under project conditions <u>and</u> the addition of project traffic causes the traffic volumes at the intersection to satisfy the peak-hour volume traffic signal warrant adopted by Caltrans.

Transportation/Traffic Issues Not Discussed Further

As discussed in the Initial Study (refer to Appendix A), due to the nature and scope of the proposed project, implementation of the project would not have the potential to result in a change in air traffic patterns at any airport in the area. Therefore, no further analysis of this issue is required.

As discussed in the Initial Study, throughout construction activities, the streets surrounding the proposed project would be open, allowing adequate access for emergency vehicles. All access routes to the subterranean parking facility would be required by California Building Code (CBC) to meet the minimum width requirement of 50 feet for emergency access. Therefore, emergency access would not be significantly affected by the project. No further analysis of this issue is required.

According to City/County Association of Governments of San Mateo County's (C/CAG) *Final Congestion Management Plan for 2005,* an analysis of a project's impacts to Congestion Management Plan (CMP)-designated roadway segments/intersections is required only if a project would contribute 100 or more peak-hour trips to a CMP-designated roadway segment/intersection. At most, the proposed project would generate 41 peak-hour trips, not all of which would disperse to a CMP-designated roadway segment/intersection. Thus, no CMP analysis is required, and the project would not exceed, either individually or cumulatively, a LOS standard established by the county congestion management agency for designated roads or highways. No further analysis of this issue is required.

As discussed in the Initial Study, the City of Pacifica Zoning Code (Article 22.5, Sec. 9-4.2259) requires all single-family detached units to provide two covered and two uncovered parking spaces per unit and all single-family attached units to provide two covered and one-half uncovered parking spaces per unit. In addition, the Code also requires a minimum of one guest space for every ten units. With 17 single-family detached units and 17 single-family attached units, the proposed project meets the required 115 parking spaces by providing 112 covered parking spaces and three uncovered parking spaces. Therefore, the project would not result in inadequate parking capacity. No further analysis of this issue is required.

The proposed project includes development of residential housing units and would not interfere with operation of the local transit services or result in the alteration or removal of bike racks, turnouts, or bus stops. Thus, the project would not conflict with adopted policies, plans, or programs supporting alternative transportation. No further analysis of this issue is required.

Project Impacts

Impact IV.F-1 The project would not cause an increase in traffic which is substantial in relation to the existing traffic load and capacity of the street system.

The proposed project consists of 34 residential units, including a mix of single-family homes and multi-family units (e.g., duplexes, triplexes). In order to analyze the potential traffic impact of the project, trip generation, distribution, and assignment were conducted. Trip generation is a calculated estimate of the number of vehicle trips that would occur during the peak hour of traffic. Trip distribution is an estimate

of the general origins and destinations of the new trips. Trip assignment is assigning the individual vehicle trips to study intersections based on the estimated trip distribution. The estimates of trip generation used the Institute of Transportation Engineers' (ITE) Trip Generation manual, which documents field studies of many different types of land uses. The project was evaluated assuming all units were single-family detached units, which represents a slightly conservative analysis. Trip distribution was estimated based on existing travel patterns documented by the traffic counts. The trip assignment was relatively straightforward for this analysis because there are few alternate routes available for travelers – indeed, the trips were assigned using only the most logical travel routes, given the estimated trip distribution.

Based on the data from the ITE manual, the proposed project would generate an estimated 33 trips during the AM peak hour (8 inbound, 25 outbound) and 41 trips during the PM peak hour (26 inbound, 15 outbound). Figure IV.F-2 shows the project trip assignment for the study intersections, and Figure IV.F-3 shows the existing-plus-project traffic volumes (Project Condition).

LOS analysis was conducted for the project condition to determine if any short-term traffic impacts to the study intersections would occur. As shown in Table IV.F-3, the addition of project traffic at the signalized study intersections would result in delay increases that exceed the City's interim one second standard for an intersection operating at a LOS F. However, the project would not cause the V/C at these intersections to increase by more than 0.010. Thus, the project would not exceed the City's standard of significance. Additionally, the worst approach LOS at the unsignalized intersection that would serve the proposed project would be LOS D during the AM peak hour and LOS B during the PM peak hour and would not result in any reductions in the LOS from an acceptable level of LOS D to an unacceptable LOS of E or F. Therefore, the project's traffic impacts related to LOS would be ***less than significant***.

CUMULATIVE IMPACTS

To analyze cumulative traffic conditions, existing traffic volumes were increased by one percent for 10 years (to 2015), and traffic from known nearby projects was also included. This one percent growth rate is typical for areas that are not completely built out, and is consistent with growth of jobs and households projected by the Association of Bay Area Governments (ABAG) for Pacifica in its latest publication of land use projections, *Projections 2005*. Additionally, City staff provided information for one nearby project that is included in the cumulative traffic analysis, informally referred to as "The Rock." Based on information provided by City staff, this project is assumed to be 63 condominium units and 24,000 square feet of retail space, and using the trip rate sources provided by City staff that were included in the traffic study for it, would generate 82 trips during the AM peak hour and 158 trips during the PM peak hour. These trips were distributed using the same assumption as for the proposed project. The result of the background growth and the trips from The Rock are the Cumulative-Without-Project traffic volumes.

This page left blank intentionally.

SR1/Reina del Mar Avenue

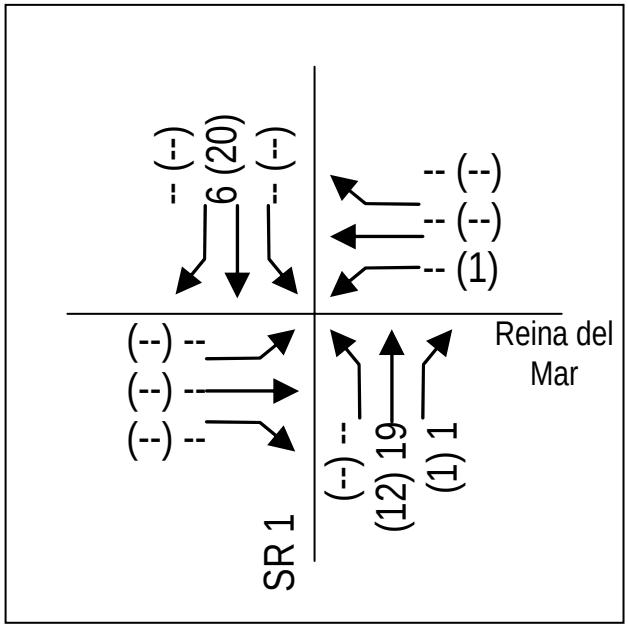

Legend

xxx = AM Peak Hour
(xxx) = PM Peak Hour

Volumes reported in vehicles per hour

SR1/Fassler Avenue

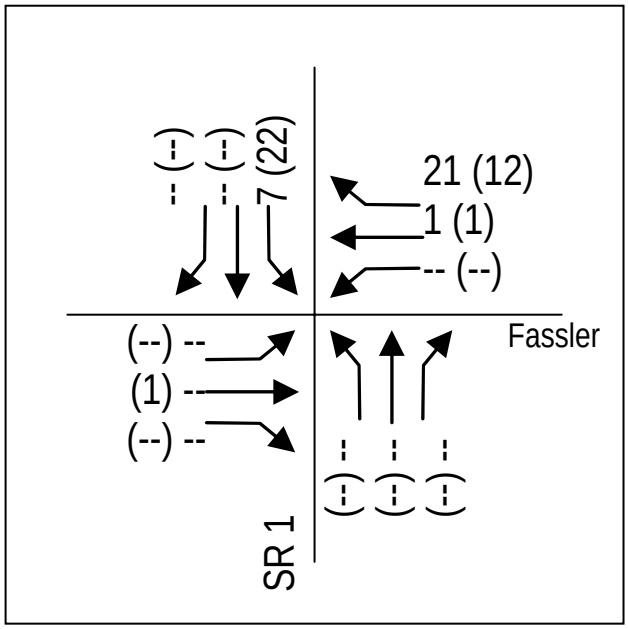

Fassler Avenue/Project Access

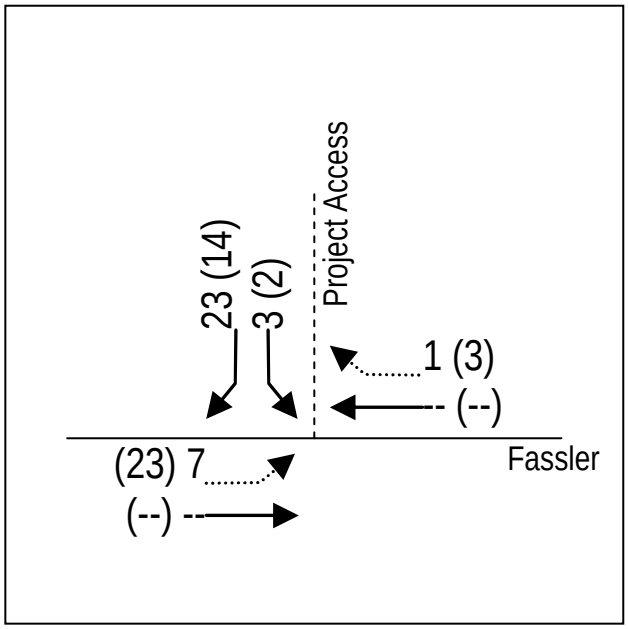

Source: Dowling Associates, Inc., October 2006.

CHRISTOPHER A. JOSEPH & ASSOCIATES
Environmental Planning and Research

NORTH

Figure IV.F-2
Project Trip Assignment

This page left blank intentionally.

SR1/Reina del Mar Avenue

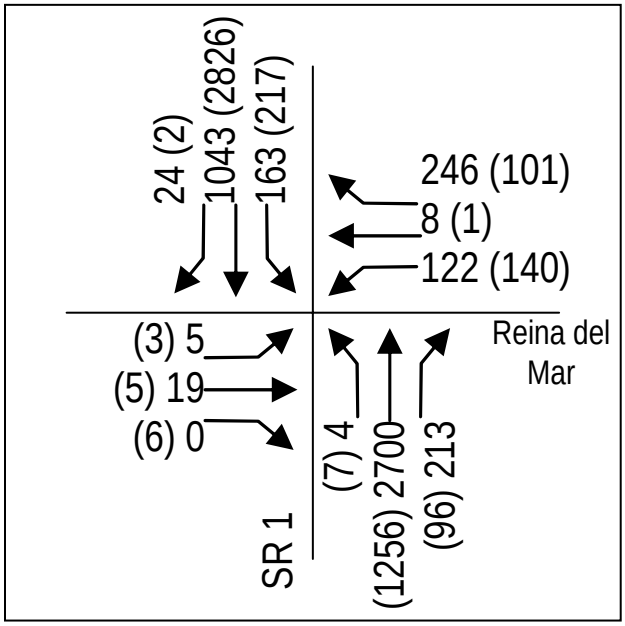

Legend

xxx = AM Peak Hour
(xxx) = PM Peak Hour

Volumes reported in vehicles per hour

SR1/Fassler Avenue

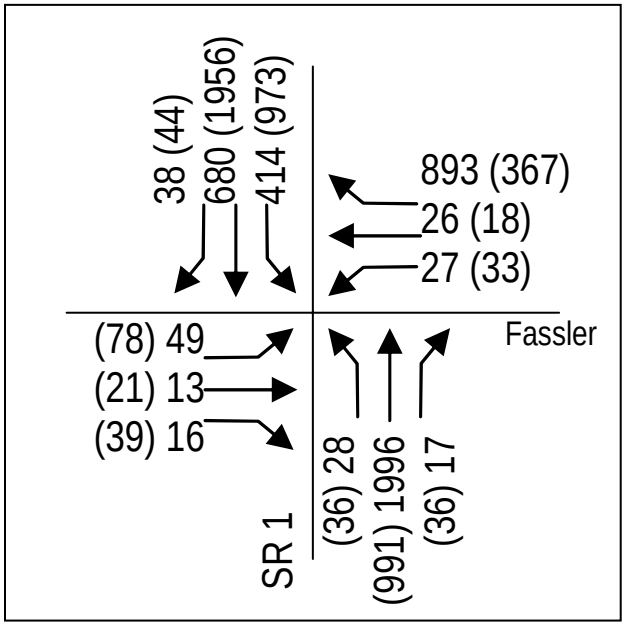

Fassler Avenue/Project Access

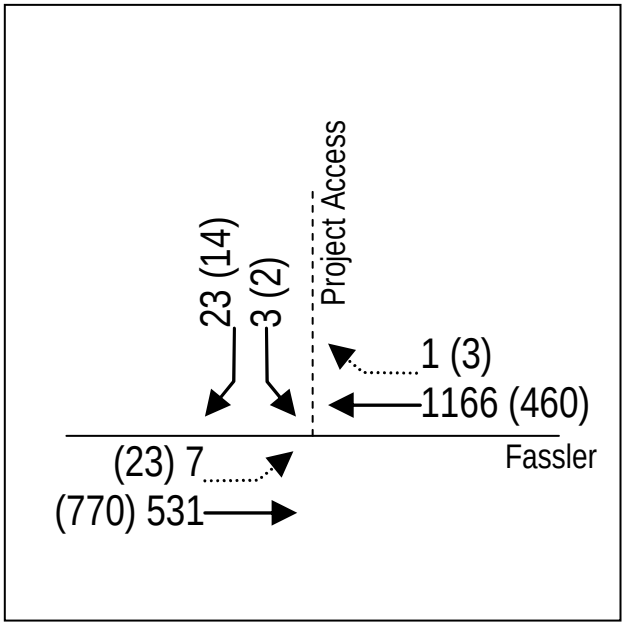

Source: Dowling Associates, Inc., October 2006.

CHRISTOPHER A. JOSEPH & ASSOCIATES
Environmental Planning and Research

NORTH

Figure IV.F-3
Existing-Plus-Project Traffic Volumes

This page left blank intentionally.

Table IV.F-3
Project Condition – LOS Results

Intersection	Existing Condition				Project Condition				
	Peak Hour	Average Delay	LOS	HCM Crit. V/C[1]	Average Delay	LOS	HCM Crit. V/C[2]	Average Delay Change	Crit. V/C Change[2]
SR1/Reina del Mar Avenue	AM	124.6	F	1.204	127.0	F	1.211	+2.4	+0.007
(signalized intersection)	PM	81.7	F	1.291	83.9	F	1.299	+2.2	+0.008
SR1/Fassler Avenue	AM	96.0	F	1.140	98.	F	1.148	+2.9	+0.008
(signalized intersection)	PM	37.3	D	0.846	37.8	D	0.848	+0.5	+0.002
Fassler Avenue/Project Access	AM	NA	NA	NA	NA	D	NA	NA	NA
(unsignalized intersection)	PM	NA	NA	NA	NA	B	NA	NA	NA

1 HCM critical V/C is calculated using Synchro output values and Equations 16-7 and 16-8 of the signalized intersection LOS methodology contained in the 2000 HCM. This approach to calculating inter section critical V/C in some cases may not match the V/C results obtained with the Synchro software but provides a close approximation. This is so because the Synchro software calculates adjusted total lost times and critical volumes at the intersection when some intersection movements overlap each other and run concurrently, whereas he HCM method uses a more simplified approach, which does not necessarily account for overlapping critical movements.
2 Changes in average delay and critical V/C under the project condition are measured relative to the existing condition.
NA: Not applicable
Source: Dowling Associates, Inc. and Hexagon Transportation Consultants, Inc., 2006.

The trips from the proposed project were then added to the Cumulative-Without-Project volumes to result in Cumulative-With-Project traffic volumes, which are shown in Figure IV.F-4. LOS calculations were then conducted, just as for the Existing and Project Conditions (refer to Table IV.F-4). As shown in Table IV.F-3, the addition of project traffic at the signalized study intersections would result in delay increases that exceed the City's interim one second standard for intersections operating at a LOS F. However, the project would not cause the V/C at these intersections to increase by more than 0.010. Additionally, the worst approach LOS at the unsignalized intersection that would serve the proposed project would be LOS D during the AM peak hour and LOS B during the PM peak hour, and the addition of project traffic would not result in unacceptable LOS. Therefore, the project's contribution to cumulative LOS at the study intersections would be ***less than significant***.

MITIGATION MEASURES

Because no impacts have been identified, no mitigation measures are required or recommended.

LEVEL OF SIGNIFICANCE AFTER MITIGATION

All transportation/traffic impacts would be ***less than significant***.

This page left blank intentionally.

SR1/Reina del Mar Avenue

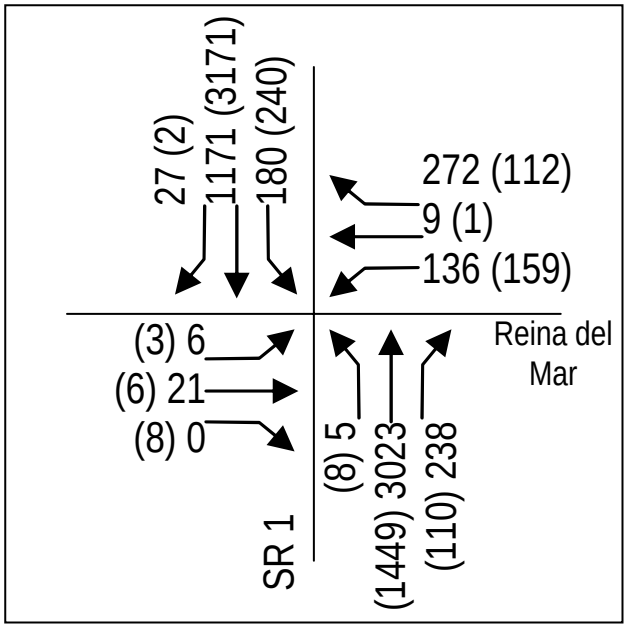

Legend

xxx = AM Peak Hour
(xxx) = PM Peak Hour

Volumes reported in vehicles per hour

SR1/Fassler Avenue

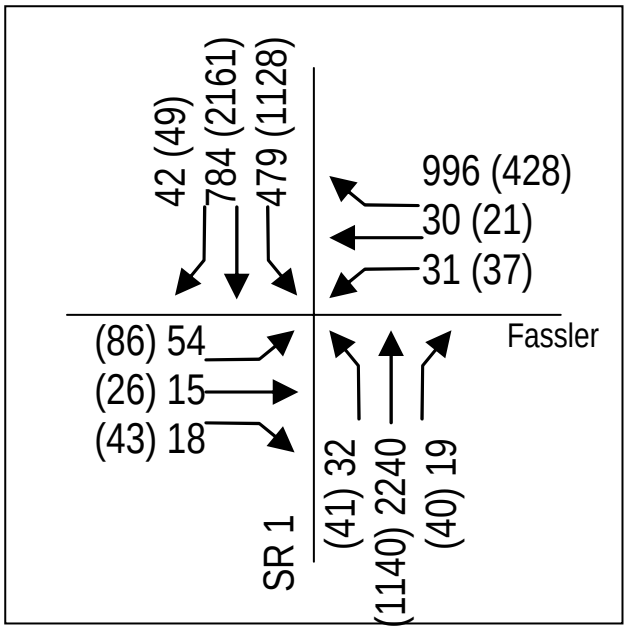

Fassler Avenue/Project Access

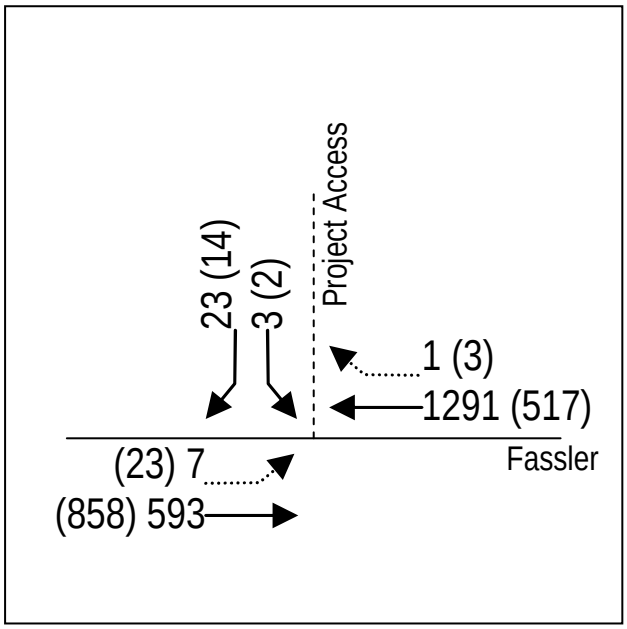

Source: Dowling Associates, Inc., October 2006.

CHRISTOPHER A. JOSEPH & ASSOCIATES
Environmental Planning and Research

NORTH

Figure IV.F-4
Cumulative-Plus-Project Traffic Volumes

This page left blank intentionally.

Table IV.F-4
Cumulative Condition – LOS Results

Intersection	Cumulative w/o Project Condition				Cumulative w/Project Condition				
	Peak Hour	Average Delay	LOS	HCM Crit. V/C[1]	Average Delay	LOS	HCM Crit. V/C[2]	Average Delay Change	Crit. V/C Change[2]
SR1/Reina del Mar Avenue	AM	138.4	F	1.263	140.7	F	1.270	+2.3	+0.007
(signalized intersection)	PM	106.3	F	1.373	106.8	F	1.375	+0.5	+0.002
SR1/Fassler Avenue	AM	111.9	F	1.190	115.2	F	1.198	+3.3	+0.008
(signalized intersection)	PM	44.7	D	0.866	44.8	D	0.867	+0.1	+0.001
Fassler Avenue/Project Access	AM	NA	D	NA	NA	D	NA	NA	NA
(unsignalized intersection)	PM	NA	B	NA	NA	B	NA	NA	NA

1 HCM critical V/C is calculated using Synchro output values and Equations 16-7 and 16-8 of the signalized intersection LOS methodology contained in the 2000 HCM. This approach to calculating inter section critical V/C in some cases may not match the V/C results obtained with the Synchro software but provides a close approximation. This is so because the Synchro software calculates adjusted total lost times and critical volumes at the intersection when some intersection movements overlap each other and run concurrently, whereas he HCM method uses a more simplified approach, which does not necessarily account for overlapping critical movements.

2 Changes in average delay and critical V/C under the cumulative-with-project condition are measured relative to cumulative-without-project condition.

NA: Not applicable

Source: Dowling Associates, Inc. and Hexagon Transportation Consultants, Inc., 2006.

This page left blank intentionally.