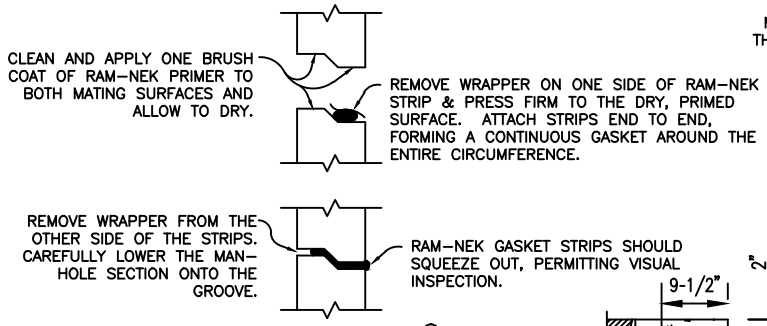

DETAIL A: RAM-NEK® GASKETS
For ALL manhole joints

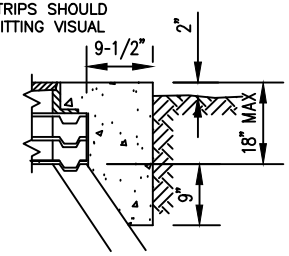

DETAIL B: COLLARS IN UNPAVED AREAS

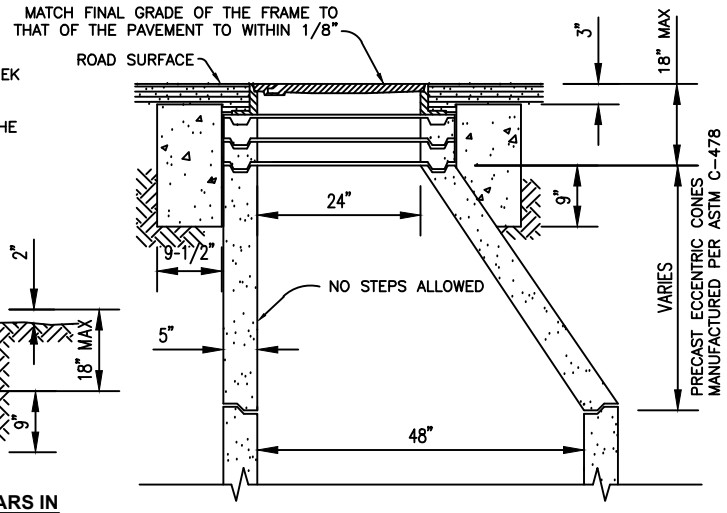

UPPER MANHOLE SECTION (ROTATED 45 DEGREES)

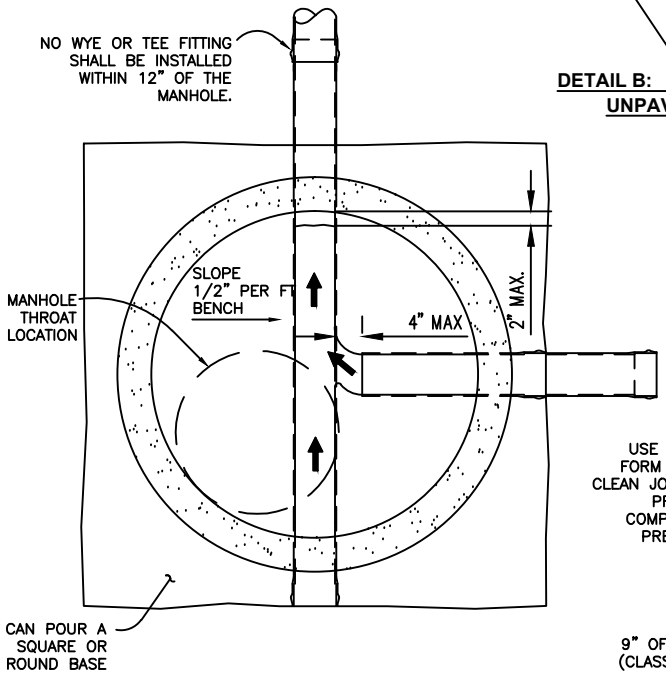

BASE SECTION A-A

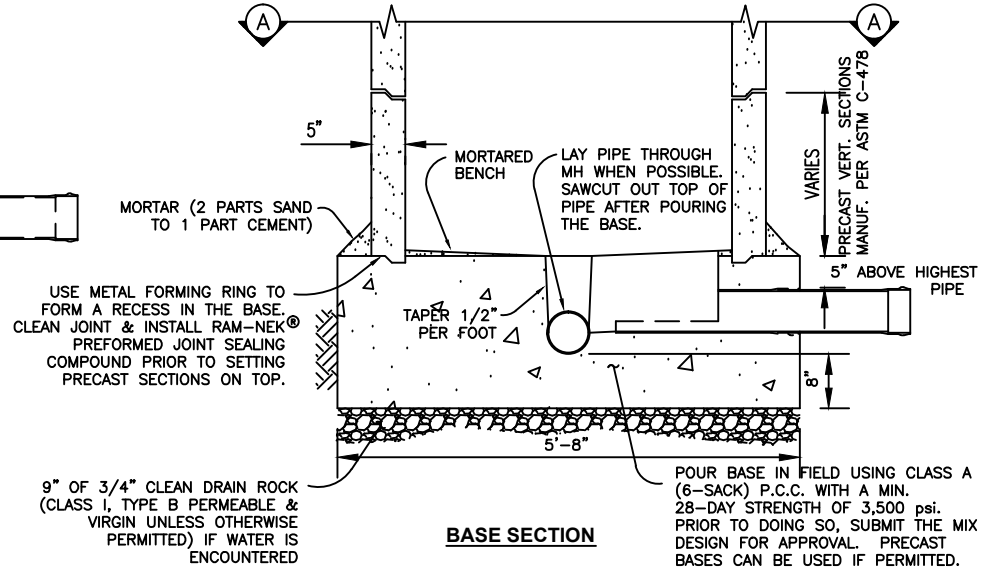

BASE SECTION

CITY OF PACIFICA DEPARTMENT OF PUBLIC WORKS WASTEWATER DIVISION	STANDARD SANITARY SEWER COLLECTION SYSTEM STANDARD MANHOLE	△			SEP 2013	DWG. NO. WW102
		△				
		REV	DATE	BY:	CREATED BY: M. Aguilar	